Ship Friday ASAP

Work Order ID 67278

Monday, March 14, 2011 2:44:58 PM

Item ID: D3371-041 **Accept** **Setup Start**

Revision ID:

Item Name: Pedal Lock Assembly **Stop**

Start Date: 3/14/2011 **Start Qty:** 1.00 **Cust Item ID:**

Required Date: 3/17/2011 **Req'd Qty:** 1.00 **Customer:**

Reference:

Approvals: **Process Plan:** MF **Date:** 11-03-14 **Tooling:** **Date:** **Run Start**

QC: **Date:** **SPC (Y/N):** **Date:** **Stop**

Sequence ID/ Work Center ID	Operation Description	Set Up/ Run Hours	Tool ID	Tool #	Plan Code	Accept Qty	Reject Qty	Reject Number	Insp. Stamp
Draw Nbr	**Revision Nbr**								
D3371	Rev B								
120		0.00							
Small Fab	Small Fab					1			
Small Fab	**Memo**	0.00							
Small Fab	1- Press dowel pins as per Dwg D3371, then assemble hinge.Ensure that assembly opens & closes smoothly. Identify as D3371-051. 2- Open D3373-7 lock package. Keep keys, lock body, lock body nut, straight cam, lock barrel, screw, 90° rotation washer and external tooth lock washer. Discard the rest. 3- Fabricate D3371-5 cam as per Dwg D3371. Identify as D3371-5 4- Assemble lock mechanism and cam and install decal as per Dwg D3371. Apply locktite to lock body nut. Qty / Part Number / Description / Batch A/R / / 262 Locktite / M13436	SB 11/03/17							
130		0.00							
Small Fab	Small Fab					1			
Small Fab	**Memo**	0.00							
Small Fab	Assemble lanyard to cyclic sock as per Dwg D3384 Identify as D3384-045	SB 11/03/17							

Dart Aerospace Ltd

W/O:		WORK ORDER CHANGES					
DATE	STEP	PROCEDURE CHANGE	By	Date	Qty	Approval Chief Eng / Prod Mgr	Approval QC Inspector

Part No: _____ **PAR #:** _____ **Fault Category:** _____ **NCR:** Yes No **DQA:** _____ **Date:** _____

Resolution: _____ **Disposition:** _____ **QA: N/C Closed:** _____ **Date:** _____

NCR:		WORK ORDER NON-CONFORMANCE (NCR)						
DATE	STEP	Description of NC Section A	Corrective Action Section B			Verification Section C	Approval Chief Eng	Approval QC Inspector
			Initial Chief Eng	Action Description Chief Eng	Sign & Date			

NOTE: Date & initial all entries

H:\FORMS\Quality Assurance\approved QA\NCRWO RevE

Work Order ID 67278

Monday, March 14, 2011 2:44:58 PM

Item ID: D3371-041 **Accept** **Setup Start** **Stop**

Revision ID:

Item Name: Pedal Lock Assembly

Start Date: 3/14/2011 **Start Qty:** 1.00 **Cust Item ID:**

Required Date: 3/17/2011 **Req'd Qty:** 1.00 **Customer:**

Reference:

Run Start **Stop**

Approvals: **Process Plan:** _____ **Date:** _____ **Tooling:** _____ **Date:** _____

QC: _____ **Date:** _____ **SPC (Y/N):** _____ **Date:** _____

Sequence ID/ Work Center ID	Operation Description	Set Up/ Run Hours	Tool ID	Tool #	Plan Code	Accept Qty	Reject Qty	Reject Number	Insp. Stamp
140	Small Fab	0.00				1			
Small Fab	**Memo**	0.00							
Small Fab	1- Assemble D3384-045 to D3371-051 using 1/4"-20 socket head cap screw and washer as per Dwg D3371. 2- Identify as D3371-041 & attach keys 3- Record the Key Number on page 4	SB 11/03/17							
150	QC5- Inspect part completeness to step on W/O	0.00				40			
QC	**Memo**	0.00							
Quality Control		Su 03/17							
160	Identify as per dwg & Stock Location: 983	0.00				11/3/17			
Packaging	**Memo**	0.00							
Packaging									

Dart Aerospace Ltd

W/O:		WORK ORDER CHANGES					
DATE	STEP	PROCEDURE CHANGE	By	Date	Qty	Approval Chief Eng / Prod Mgr	Approval QC Inspector

Part No: _____ **PAR #:** _____ **Fault Category:** _____ **NCR:** Yes No **DQA:** _____ **Date:** _____

Resolution: _____ **Disposition:** _____ **QA: N/C Closed:** _____ **Date:** _____

NCR:		WORK ORDER NON-CONFORMANCE (NCR)						
DATE	STEP	Description of NC Section A	Corrective Action Section B			Verification Section C	Approval Chief Eng	Approval QC Inspector
			Initial Chief Eng	Action Description Chief Eng	Sign & Date			

NOTE: Date & initial all entries

Work Order ID 67278

Monday, March 14, 2011 2:44:58 PM

Item ID: D3371-041 **Accept** **Setup** **Start**

Revision ID: **Stop**

Item Name: Pedal Lock Assembly

Start Date: 3/14/2011 **Start Qty:** 1.00 **Cust Item ID:**

Required Date: 3/17/2011 **Req'd Qty:** 1.00 **Customer:**

Reference:

Run **Start**

Approvals: **Process Plan:** ____ **Date:** ____ **Tooling:** ____ **Date:** ____ **Stop**

QC: ____ **Date:** ____ **SPC (Y/N):** ____ **Date:** ____

Sequence ID/ Work Center ID	Operation Description	Set Up/ Run Hours	Tool ID	Tool #	Plan Code	Accept Qty	Reject Qty	Reject Number	Insp. Stamp
170	QC21- Final Inspection - Work Order Release	0.00						11/3/17	
QC Quality Control	**Memo**	0.00							

RCU-03-17

Dart Aerospace Ltd

W/O:		WORK ORDER CHANGES					
DATE	STEP	PROCEDURE CHANGE	By	Date	Qty	Approval Chief Eng / Prod Mgr	Approval QC Inspector

Part No: _____ **PAR #:** _____ **Fault Category:** _____ **NCR:** Yes No **DQA:** _____ **Date:** _____

Resolution: _____ **Disposition:** _____ **QA: N/C Closed:** _____ **Date:** _____

NCR:		WORK ORDER NON-CONFORMANCE (NCR)						
DATE	STEP	Description of NC Section A	Corrective Action Section B			Verification Section C	Approval Chief Eng	Approval QC Inspector
			Initial Chief Eng	Action Description Chief Eng	Sign & Date			

NOTE: Date & initial all entries

Picklist Print

Monday, March 14, 2011 2:44:55 PM

3

Work Order ID: 67278

Parent Item: D3371-041

Parent Item Name: Pedal Lock Assembly

Start Date: 3/14/2011 **Required Date:** 3/17/2011

Start Qty: 1.00 **Required Qty:** 1.00

Comments: IPP Rev: A Removed from 9 Digit 06-03-10 KJ

Component Item ID/ Item Name	Replacement Item ID	Mfg/ Purch	Bin Item	Primary Location	Last Location	Route Seq ID	Unit of Measure	Qty on Hand	Qty per Kit	Total Qty	Qty Issued	Date Issued	Status
238-028		Purchased	No			120	Each	233.0000	2	2	SB	11/03/17	1
3/16" Dowel Pin .5" long													
				Location			**Loc Qty**		**Loc Code**				
				ST399			233						
					106673		92						
					108114		97						
					17848		44			2			
AN526C832R6		Purchased	No			120	Each	350.0000	4	4	SB	11/03/17	1
Screw													
				Location			**Loc Qty**		**Loc Code**				
				ST327			350						
					16612		350			2			
AN960-416	NAS1149F0463P	Purchased	No			140	Each	0.0000	2	2	SB	11/03/17	1
Washer								M 116702					
CBL-1240		Purchased	No			130	f	451.0028	1.6666	1.754316	SB	11/03/17	1
Cable													
				Location			**Loc Qty**		**Loc Code**				
				ST275			151.0028407			1.754			
					113565		151.002841						
				ST284			300						
					116438		300						

Dart Aerospace Ltd

W/O:		WORK ORDER CHANGES					
DATE	STEP	PROCEDURE CHANGE	By	Date	Qty	Approval Chief Eng / Prod Mgr	Approval QC Inspector

Part No: _____ **PAR #:** _____ **Fault Category:** _____ **NCR:** Yes No **DQA:** _____ **Date:** _____

Resolution: _____ **Disposition:** _____ **QA: N/C Closed:** _____ **Date:** _____

NCR:		WORK ORDER NON-CONFORMANCE (NCR)						
DATE	STEP	Description of NC Section A	Corrective Action Section B			Verification Section C	Approval Chief Eng	Approval QC Inspector
			Initial Chief Eng	Action Description Chief Eng	Sign & Date			

NOTE: Date & initial all entries

H:\FORMS\Quality Assurance\approved QA\NCRWO RevE

Picklist Print

Monday, March 14, 2011 2:44:55 PM

Work Order ID: 67278

Parent Item: D3371-041

Parent Item Name: Pedal Lock Assembly

Start Date: 3/14/2011 **Required Date:** 3/17/2011

Start Qty: 1.00 **Required Qty:** 1.00

CBL-460	Purchased	No	130	Each	108.0000	2	2	SB 11/03/17 (1)
Loop Sleeve								

Location	Loc Qty	Loc Code
ST284	108	
116438	1	
116953	107	

D2728-7	Manufactured	No	120	Each	0.0000	0	0	SB 11/03/17 (1)
Dart Logo label								
D3371-1	Manufactured	No	120	Each	3.0000	1	1	SB 11/03/17 (1)
Pedal Lock Base								

Location	Loc Qty	Loc Code
ST485	3	
58436	3	

D3371-3	Manufactured	No	120	Each	1.0000	1	1	SB 11/03/17 (1)
Pedal Lock Cover								

Location	Loc Qty	Loc Code
ST473	1	B 67281
58437	1	

D3373-7	Manufactured	No	120	Each	0.0000	1	1	SB 11/03/17 (1)
Cam Lock			B 26212					

Dart Aerospace Ltd

W/O:		WORK ORDER CHANGES					
DATE	STEP	PROCEDURE CHANGE	By	Date	Qty	Approval Chief Eng / Prod Mgr	Approval QC Inspector

Part No: _____ **PAR #:** _____ **Fault Category:** _____ **NCR:** Yes No **DQA:** _____ **Date:** _____

Resolution: _____ **Disposition:** _____ **QA: N/C Closed:** _____ **Date:** _____

NCR:		WORK ORDER NON-CONFORMANCE (NCR)						
DATE	STEP	Description of NC Section A	Corrective Action Section B			Verification Section C	Approval Chief Eng	Approval QC Inspector
			Initial Chief Eng	Action Description Chief Eng	Sign & Date			

NOTE: Date & initial all entries

Picklist Print

Monday, March 14, 2011 2:44:56 PM

Work Order ID: 67278

Parent Item: D3371-041

Parent Item Name: Pedal Lock Assembly

Start Date: 3/14/2011 **Required Date:** 3/17/2011

Start Qty: 1.00 **Required Qty:** 1.00

D3384-1	Manufactured	No	130	Each	7.0000	1	1	SB 11/03/17 ①
Cyclic Sock								

Location	Loc Qty	Loc Code
ST486	7	
58937	7	

D3385-3	Manufactured	No	120	Each	108.0000	1	1	SB 11/03/17 ①
Hinge								

Location	Loc Qty	Loc Code
ST051	108	
22387	108	

HX-81	Purchased	No	140	Each	34.0000	1	1	SB 11/03/17 ①
1/4"-20 SHCS 3/8" long								

Location	Loc Qty	Loc Code
ST390	34	
114383	34	

M 110383

Dart Aerospace Ltd

W/O:		WORK ORDER CHANGES					
DATE	STEP	PROCEDURE CHANGE	By	Date	Qty	Approval Chief Eng / Prod Mgr	Approval QC Inspector

Part No: _____ **PAR #:** _____ **Fault Category:** _____ **NCR:** Yes No **DQA:** _____ **Date:** _____

Resolution: _____ **Disposition:** _____ **QA: N/C Closed:** _____ **Date:** _____

NCR:		WORK ORDER NON-CONFORMANCE (NCR)						
DATE	STEP	Description of NC Section A	Corrective Action Section B			Verification Section C	Approval Chief Eng	Approval QC Inspector
			Initial Chief Eng	Action Description Chief Eng	Sign & Date			

NOTE: Date & initial all entries

DESIGN	DRAWN BY	DART AEROSPACE LTD HAWKESBURY, ONTARIO, CANADA	
CHECKED	APPROVED	DRAWING NO. D3371	REV. B SHEET 1 OF 4
DATE 05.03.22		TITLE PEDAL LOCK	SCALE 1:3
A	04.12.06	NEW ISSUE	
B	05.03.22	D3385-3 WAS D3385-1	

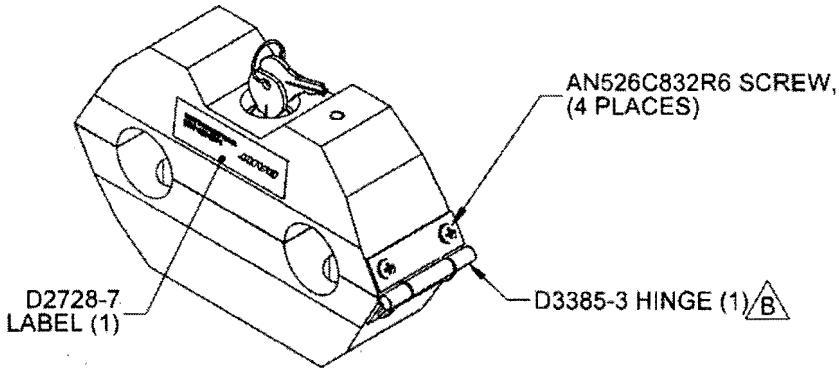

PEDAL LOCK SHOWN LOCKED WITH KEY

RELEASED
05/04/28

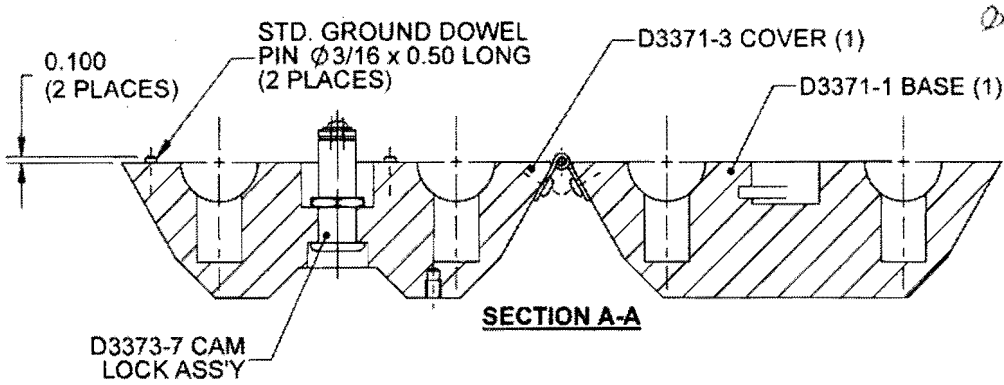

SECTION A-A

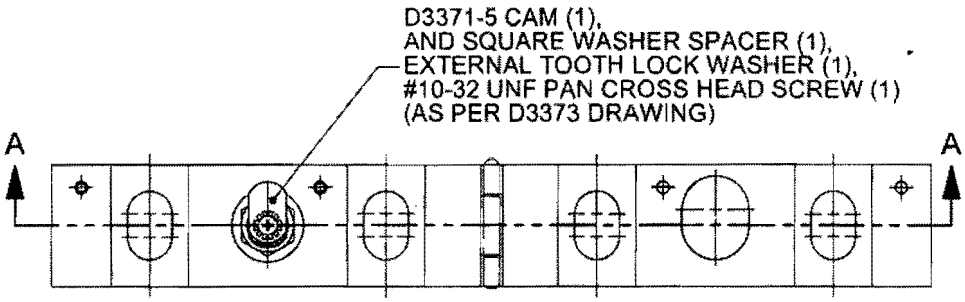

D3371-051 PEDAL LOCK ASSEMBLY

#6792

NOTES:

1) TOLERANCES ARE PER DART QSI 018 UNLESS OTHERWISE NOTED
2) ALL DIMENSIONS ARE IN INCHES

Dart Aerospace Ltd

W/O:		WORK ORDER CHANGES					
DATE	STEP	PROCEDURE CHANGE	By	Date	Qty	Approval Chief Eng / Prod Mgr	Approval QC Inspector

Part No: _____ **PAR #:** _____ **Fault Category:** _____ **NCR:** Yes No **DQA:** _____ **Date:** _____

Resolution: _____ **Disposition:** _____ **QA: N/C Closed:** _____ **Date:** _____

NCR:		WORK ORDER NON-CONFORMANCE (NCR)						
DATE	STEP	Description of NC Section A	Corrective Action Section B			Verification Section C	Approval Chief Eng	Approval QC Inspector
			Initial Chief Eng	Action Description Chief Eng	Sign & Date			

NOTE: Date & initial all entries

DESIGN	DRAWN BY	DART AEROSPACE LTD HAWKESBURY, ONTARIO, CANADA	
CHECKED	APPROVED	DRAWING NO. D3371	REV. B SHEET 2 OF 4
DATE 05.03.22		TITLE PEDAL LOCK	SCALE 1:2

RELEASED

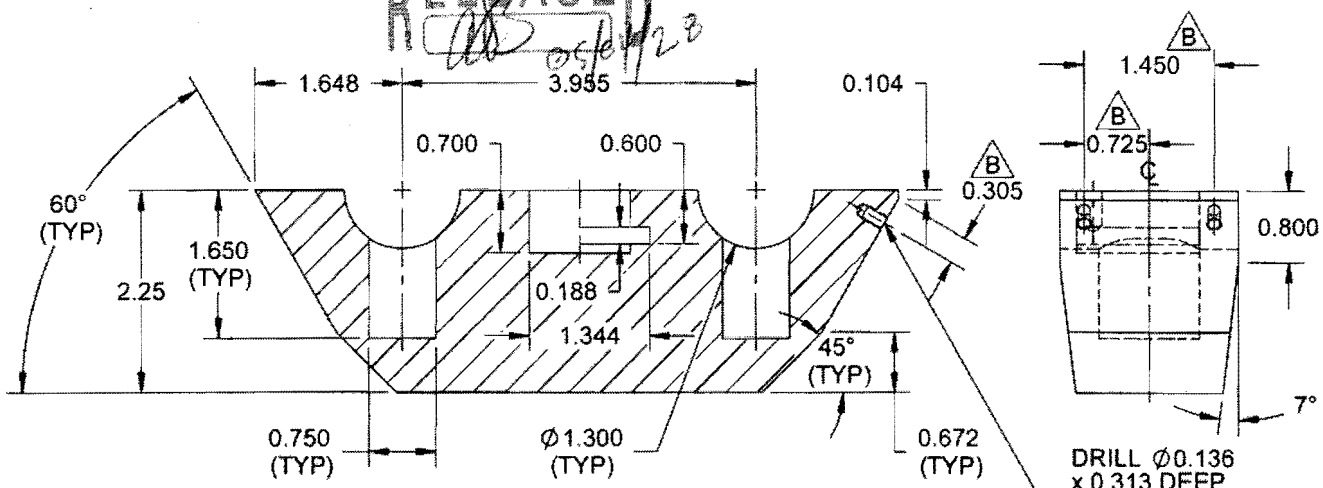

SECTION B-B

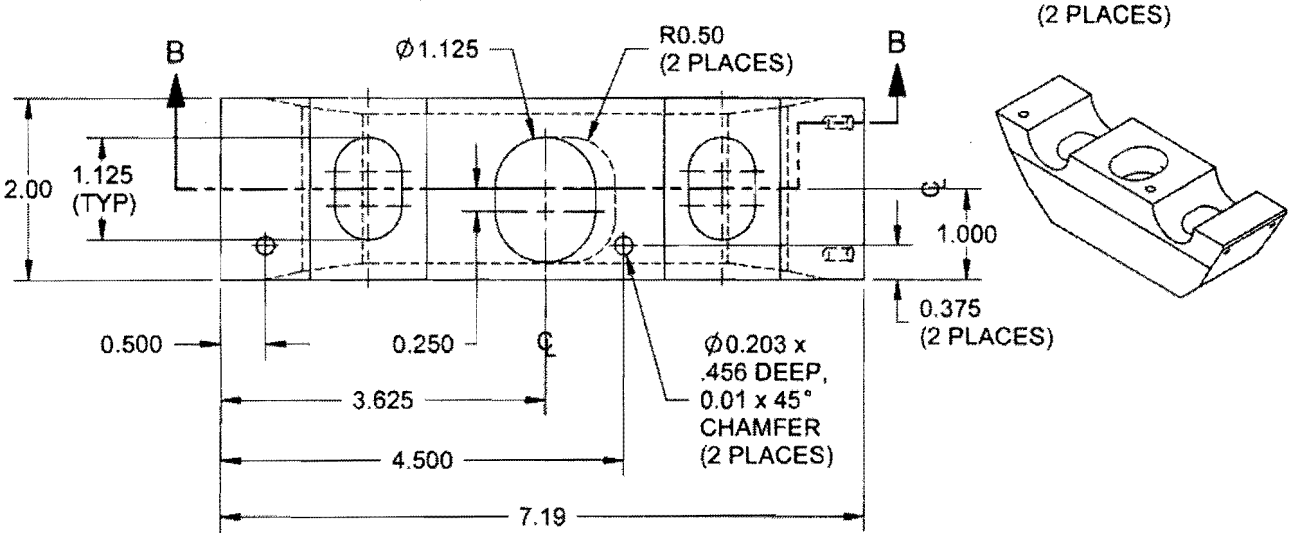

D3371-1 BASE

#67279

NOTES:

1) MATERIAL: 6061-T6/T651 (QQ-A-200/8 OR QQ-A-225/8)
(REF. DART SPEC. M6061T6B)
2) COVER INSIDE HOLES PRIOR PAINTING
3) FINISH: CHEMICAL CONVERSION COAT PER DART QSI 005 4.1
POWDER COAT FIRE RED (4.3.5.10) PER DART QSI 005 4.3
4) TOLERANCES ARE PER DART QSI 018 UNLESS OTHERWISE NOTED
5) ALL DIMENSIONS ARE IN INCHES
6) BREAK ALL SHARP EDGES 0.005 TO 0.010

Dart Aerospace Ltd

W/O:		WORK ORDER CHANGES					
DATE	STEP	PROCEDURE CHANGE	By	Date	Qty	Approval Chief Eng / Prod Mgr	Approval QC Inspector

Part No: _____ **PAR #:** _____ **Fault Category:** _____ **NCR:** Yes No **DQA:** _____ **Date:** _____

Resolution: _____ **Disposition:** _____ **QA: N/C Closed:** _____ **Date:** _____

NCR:		WORK ORDER NON-CONFORMANCE (NCR)						
DATE	STEP	Description of NC Section A	Corrective Action Section B			Verification Section C	Approval Chief Eng	Approval QC Inspector
			Initial Chief Eng	Action Description Chief Eng	Sign & Date			

NOTE: Date & initial all entries

DESIGN	DRAWN BY	DART AEROSPACE LTD HAWKESBURY, ONTARIO, CANADA	
CHECKED	APPROVED	DRAWING NO. D3371	REV. B SHEET 3 OF 4
DATE 05.03.22		TITLE PEDAL LOCK	SCALE 1:2

RELEASED

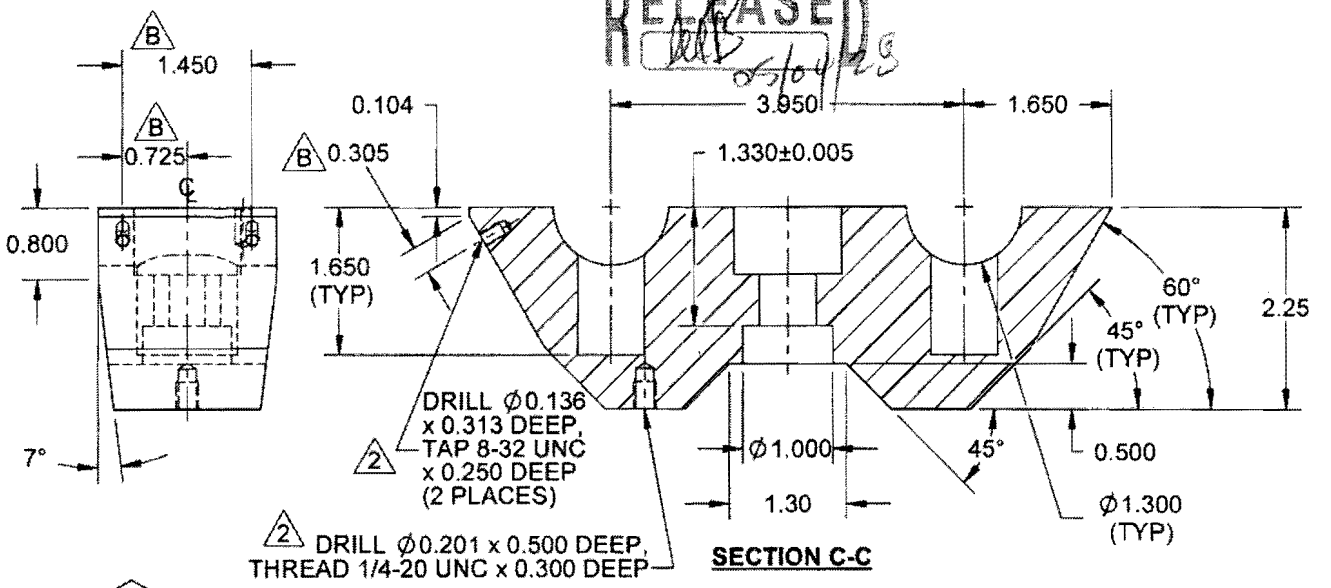

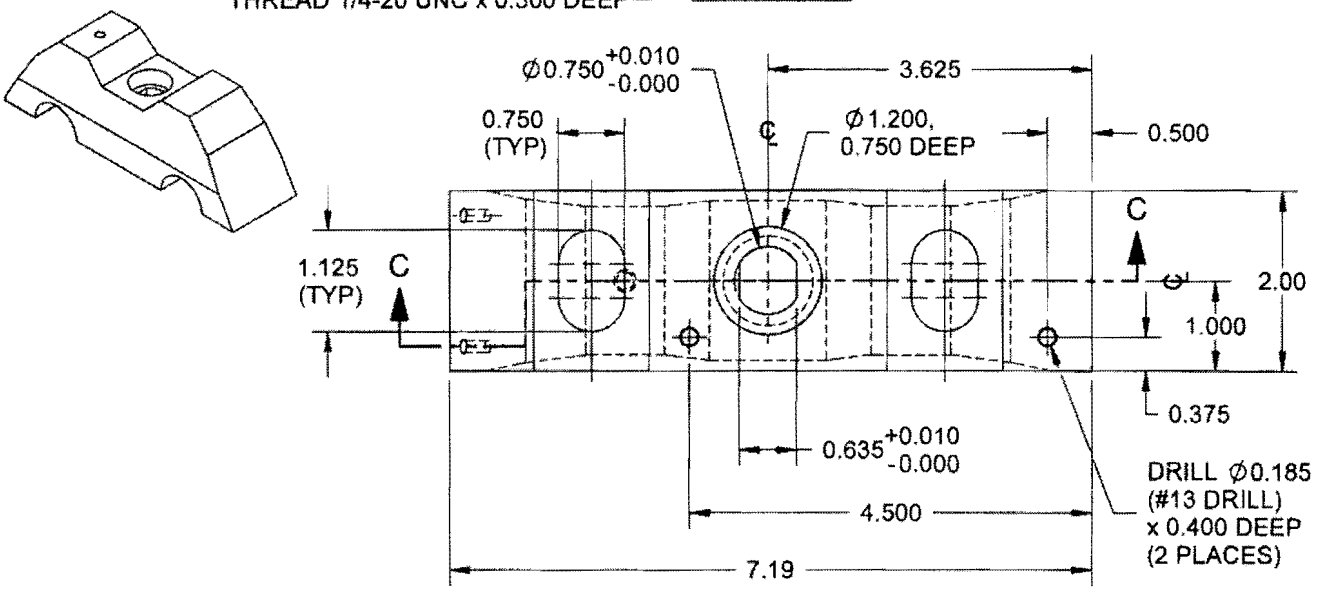

D3371-3 COVER

#6778

NOTES:

1) MATERIAL: 6061-T6/T651 (QQ-A-200/8 OR QQ-A-225/8)
(REF. DART SPEC. M6061T6B)
2) COVER INSIDE HOLES PRIOR PAINTING
3) FINISH: CHEMICAL CONVERSION COAT PER DART QSI 005 4.1
POWDER COAT FIRE RED (4.3.5.10) PER DART QSI 005 4.3
4) TOLERANCES ARE PER DART QSI 018 UNLESS OTHERWISE NOTED
5) ALL DIMENSIONS ARE IN INCHES
6) BREAK ALL SHARP EDGES 0.005 TO 0.010

Dart Aerospace Ltd

W/O:		WORK ORDER CHANGES					
DATE	STEP	PROCEDURE CHANGE	By	Date	Qty	Approval Chief Eng / Prod Mgr	Approval QC Inspector

Part No: _____ **PAR #:** _____ **Fault Category:** _____ **NCR:** Yes No **DQA:** _____ **Date:** _____

Resolution: _____ **Disposition:** _____ **QA: N/C Closed:** _____ **Date:** _____

NCR:		WORK ORDER NON-CONFORMANCE (NCR)						
DATE	STEP	Description of NC Section A	Corrective Action Section B			Verification Section C	Approval Chief Eng	Approval QC Inspector
			Initial Chief Eng	Action Description Chief Eng	Sign & Date			

NOTE: Date & initial all entries

DESIGN	DRAWN BY	DART AEROSPACE LTD HAWKESBURY, ONTARIO, CANADA	
CHECKED	APPROVED	DRAWING NO. D3371	REV. B SHEET 4 OF 4
DATE 05.03.22		TITLE PEDAL LOCK	SCALE 2:1

RELEASED
08/04/28

SPECIFICATION CONTROL DRAWING

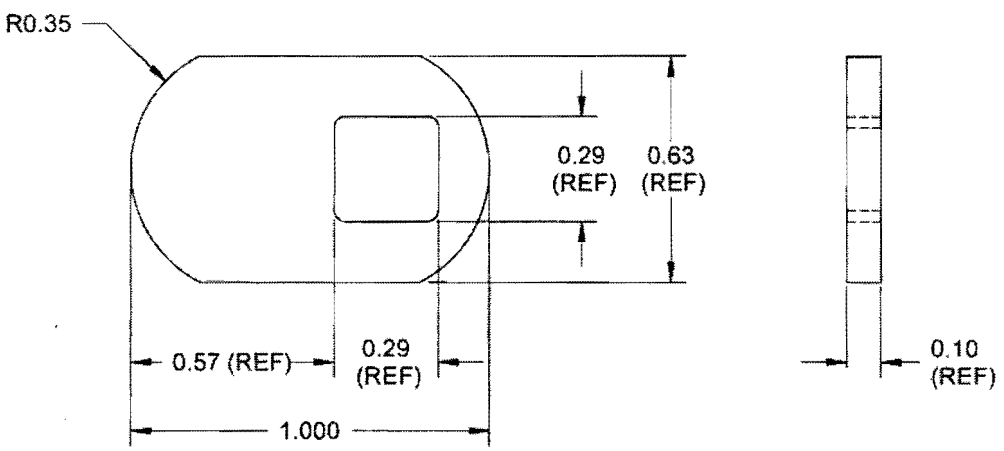

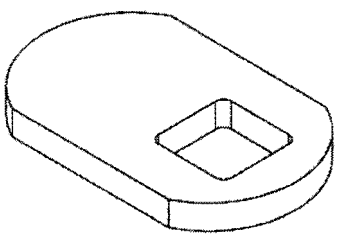

D3371-5 CAM

#67976

NOTES:

1) MATERIAL: SUPPLIER BY D3373, MODIFIED AS SHOWN
2) TOLERANCES ARE PER DART QSI 018 UNLESS OTHERWISE NOTED
3) ALL DIMENSIONS ARE IN INCHES
4) BREAK ALL SHARP EDGES 0.005 TO 0.010

Dart Aerospace Ltd

W/O:		WORK ORDER CHANGES					
DATE	STEP	PROCEDURE CHANGE	By	Date	Qty	Approval Chief Eng / Prod Mgr	Approval QC Inspector

Part No: _____ **PAR #:** _____ **Fault Category:** _____ **NCR:** Yes No **DQA:** _____ **Date:** _____

Resolution: _____ **Disposition:** _____ **QA: N/C Closed:** _____ **Date:** _____

NCR:		WORK ORDER NON-CONFORMANCE (NCR)						
DATE	STEP	Description of NC Section A	Corrective Action Section B			Verification Section C	Approval Chief Eng	Approval QC Inspector
			Initial Chief Eng	Action Description Chief Eng	Sign & Date			

NOTE: Date & initial all entries